Developing the PARIS: Using the CAVE to Prototype a New VR Display

Andrew Johnson, Dan Sandin, Greg Dawe, Tom DeFanti
Dave Pape, Zhongwei Qiu, Samroeng Thongrong, Dana Plepys

Electronic Visualization Laboratory
University of Illinois at Chicago, Chicago, IL 60607, USA
(312) 996-3002 voice, (312) 413-7585 fax
paris@evl.uic.edu

Abstract

The PARIS (Personal Augmented Reality Immersive System) is a new VR display device that was first prototyped as a virtual device in a CAVE, to aid in the development process. This initial prototyping in VR allowed the designers to save time and money, and to garner valuable feedback from prospective users, before finally committing the design to hardware.

1. Introduction

The Electronic Visualization Laboratory at the University of Illinois at Chicago has developed several projection-based VR devices including the CAVE® [1], the ImmersaDesk ® [2], and its successor the ImmersaDesk 2. Our recent work has focused on smaller desktop systems, such as the prototype for the plasma-display based ImmersaDesk 3 [4]. See Figure 1. All of these projection-based displays suffer from occlusion of the image by your hand or interaction device – which can cause slight visual disorientation when trying to interact with nearby virtual objects. As an augmented reality device, the goal of the PARIS is to provide a wide field of view desktop-compatible VR system, where the user's hands are integrated with the virtual space and provide the primary means of interaction. The user can also see his/her keyboard and mouse on the desktop, and use those devices when they provide the most appropriate interface.

Like the CAVE and the ImmersaDesk, the PARIS was first designed using a CAD program. Unlike our previous VR devices, the PARIS went through an additional series of design reviews within VR before being committed to hardware. The PARIS design moved through three stages. In the first stage we created a conceptual design for the device by sketching out estimates of the size and orientation of the PARIS components. In the second stage we repeatedly simulated the PARIS in the CAVE allowing users to test and evaluate the simulated PARIS to correct design errors. In the third stage we built a physical prototype based on the design corrections from the CAVE simulation.

2. Previous Design Work with the ImmersaDesk

The ImmersaDesk was designed to be a portable development station for the CAVE that required only a single graphics pipe. It was meant to be a self-contained package that could roll through industrial-sized doorways and required little assembly on site. To maximize accessibility, the display screen was positioned close to the floor. It was assumed that the user would be seated, as at a drafting table, to use the display. Sufficient legroom enabled a seated user to position the screen in their lap, providing 40-degree field of view (FOV) above and 56-degree FOV below eye level.

EVL has several ImmersaDesks and most are in daily use. Most of the ImmersaDesk users do not tend to sit in front of the desk as we expected; rather they stand in front of it. The ImmersaDesks field of view, which was designed for a seated user, is not fully utilized. Furthermore, the typical user does not 'belly up' to the ImmersaDesk, but stands back several inches from the base of the screen. From this position, a person six foot tall sees a virtual horizon about 5'9" above the floor, and thus less that 10 degrees of sky can be seen.

Feedback during the design phase is critical. The approach that was taken in building the ImmersaDesk involved first observing the prospective user's work habits with existing devices (the CAVE and stereo monitors) to discover what should be the essential features of the new device. Then the view volume (the volume between the eye and the screen) and the interaction volume (volume where the user's hands can interact with the virtual world) were calculated. Based on this a set of possible designs for the entire device were created, and shown to the users to get their feedback. A physical prototype was then built and evaluated.

Figure 1: Photographs of EVL's previous virtual reality devices – the CAVE, the ImmersaDesk, and the prototype of the plasma-panel based ImmersaDesk 3

The problem with this approach is that the end user has no chance to use and test the device until it is built. If the user is adept at reading CAD drawings, or using the CAD software then he/she can get some idea of how this device will appear in its final form, but that limits the audience that can give valuable feedback. It is also more difficult to evaluate ergonomic issues in a CAD model [6]. If users had been allowed to interact with a full size virtual model of the ImmersaDesk in the CAVE before the ImmersaDesk design was finalized and built, then the issues described previously would have been discovered earlier and modifications made accordingly. Learning from this, we used a different approach in designing the PARIS – an approach that leverages our existing CAVE experience.

3. The PARIS

The ImmersaDesk, like the CAVE, suffers from occlusion of the image by the hand or wand. This occlusion is common to all rear projected displays. When a virtual object is within range of your arm it is possible to place your arm 'behind' the virtual object, but your arm will always appear in front of the virtual object because the virtual object is projected on the screen. This situation sends the brain mixed signals and breaks the visual illusion. As a way to avoid this problem, we designed the PARIS to be an augmented reality device.

Projection-based augmented reality devices are not new. Over twenty years ago Ken Knowlton created a see-through display for Bell Labs using a half-silvered mirror mounted at an angle in front of a telephone operator [3]. The monitor driving the display was positioned above the desk facing down so that its image of a virtual keyboard could be superimposed over the operator's hands working under the mirror. This allowed the labels on the operator's physical keyboard to be dynamically reconfigured to match the current task. More recently researchers at the National University of Singapore's Institute of Systems Science [5], and researchers at MIT [7] have built stereo devices using a monitor driven by an SGI workstation. Neither of these systems provide head tracking, but assume that user remains in a relatively fixed position.

The PARIS is an ImmersaDesk-sized display that uses two mirrors to fold the optics, a translucent rear-projection screen, and a half-silvered mirror to create a projection-based augmented reality display on a desktop. The projector is used to illuminate the translucent screen that sits above the user. The user looks through a half-silvered mirror that reflects the image from above into the space above and behind the desktop. The user, sitting at the desk, works with his/her hands below the mirror, allowing the use of a keyboard and mouse on the desktop as well as manipulating virtual objects using the traditional wand, or gloves. The placement of the components, their relationship to the physical design, and their ergonomic affect on the user are obviously critical.

While we would prefer to use a flat panel display such a plasma panel or an LCD panel, the technology is not robust enough yet to provide a large stereo display [4]. Instead we are prototyping the PARIS using projectors.

Another issue that we wanted to address with the PARIS was the vergence / accommodation conflict. With any projection-based display the user's eyes focus on the display screen. However, with a stereo image, the user's eyes converge to look at the 3D point where the virtual object is located. If the virtual object is not located 'on' the screen, these two cues create a conflict. This is particularly a problem in the CAVE, where the screen is several feet further away than the objects that you might comfortably grab or interact with directly. The ImmersaDesk reduces this conflict but since the ImmersaDesk screen is physical it can get still get in the way. In the PARIS, the virtual screen is located at arm's length so the user can grab objects located there without a significant vergence / accommodation conflict.

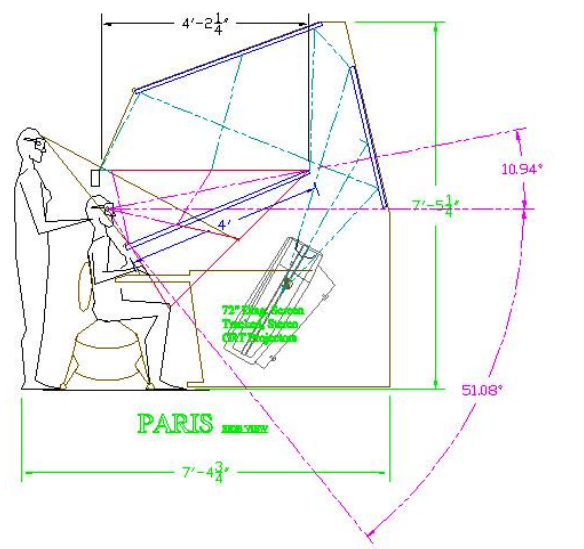

Figure 2: The initial CAD design of the PARIS, used to create the first version of the simulated PARIS in the CAVE

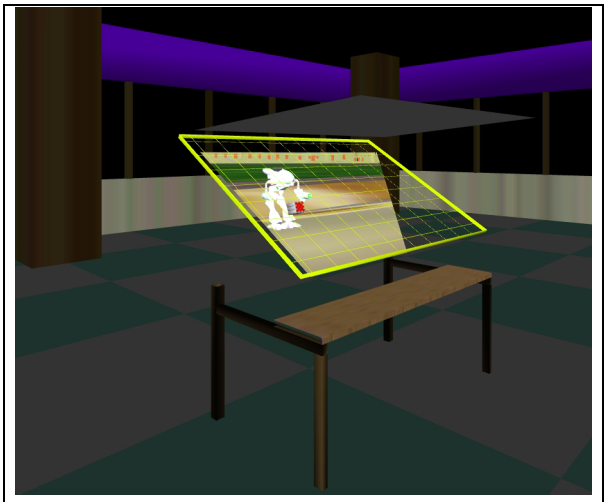

Figure 3: The simulated PARIS. The half-silvered mirror is highlighted and the projection screen is shown over the user. The correct clipping planes are used to show the user's field of view with the device. During the evaluation sessions in the CAVE, a real table was placed in the same position as the virtual table to make the user's experience more realistic.

As additional design criteria, the PARIS needed to be small enough to fit into a typical office, but give the user a wide field of view, and a large working volume for their hands. We wanted to be able to mount one or more cameras behind the half-silvered mirror to enable gesture recognition and allow the PARIS to be used as a teleconferencing system. We also wanted the user to be able to raise the screen out of the way – that way the user could use their desk as they normally would, and when they needed the display (whether a stereoscopic VR display, or just a large non-stereo screen) they could pull the half-silvered mirror down.

4. Creating the PARIS Simulation in the CAVE

The initial CAD drawing of PARIS is shown in Figure 2. This CAD drawing was then used to construct a polygonal model of the PARIS that was placed within the CAVE using SGI Performer and the Performer CAVE library. A physical chair and clear acrylic desktop were also placed in the CAVE so a user could sit in the correct relationship to the virtual PARIS mirror. See Figure 3. The edges of the half-silvered mirror were highlighted to help the users see how far they could move their head, and how large the interaction volume was for their hands.

The PARIS simulation had two modes of interaction. In the first mode the user could move around the simulated PARIS. The user could then lock down the position of the simulated PARIS in the CAVE and navigation and interaction switched to controlling navigation and interaction on the simulated PARIS screen. Thus the user could control a simulated scene on a simulated VR device within the CAVE. Head and hand tracking are critical in the simulation, as we were primarily interested in the size of the user's field of view and interaction volume.

The correct clipping planes were computed to give the user the appropriate stereo view of the graphics being displayed on the simulated PARIS screen and reflected by the simulated PARIS half-silvered mirror. These graphics on the PARIS screen showed a virtual world containing both a large space and a nearby movable object. This allowed the user to evaluate the PARIS both in terms of large spaces to move through and nearby objects to manipulate, giving the user a more realistic sense of their field of view and interaction volume.

To investigate possible distractions in the PARIS, a simulated reflection of the user's head was displayed in the virtual half-silvered mirror, and the rear projected graphics that the mirror reflects are displayed on the virtual screen above the user's head.

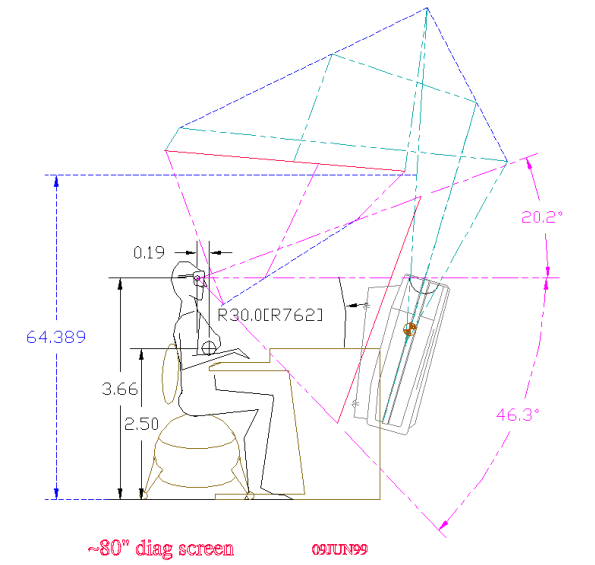

Figure 4: The final CAD design of the PARIS, created in response to the suggestions made during the evaluation of the simulated PARIS in the CAVE. This design was used to create the first physical prototype

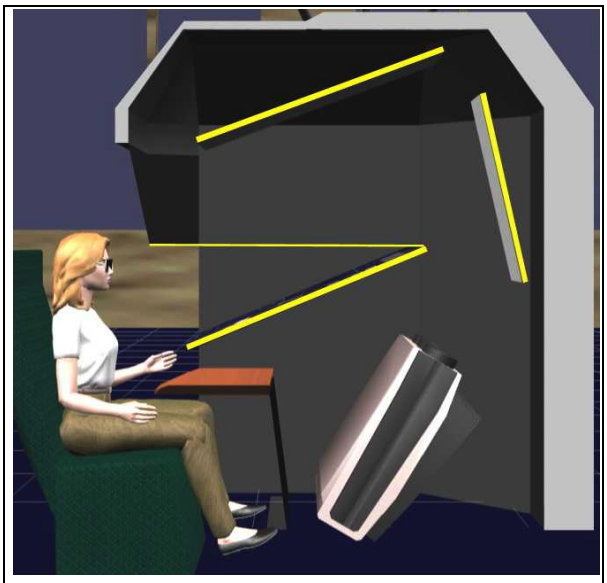

Figure 5: Artist's rendering of the final PARIS design using an Electrohome projector to supply the stereo imagery.

5. Evaluating the PARIS Simulation

Groups of students, faculty and staff then entered the CAVE with the PARIS simulation running to experience and discuss the design, taking turns sitting at the device. One of the first observations in the simulation was the "lack of sky." The seated user had about 10 degrees of upward elevation, the same as a standing user had on the ImmersaDesk, which seemed constraining. This suggested that the slope of the mirror needed to be increased. Increasing the slope beyond 20 degrees however made the reflection of the user's face in the half-silvered mirror too noticeable. After several trials we converged on a design giving the user a 20-degree field of view upwards and 46 degrees downwards.

Other issues included the height of the screen, the size of the screen, how the user would sit in relation to the screen, and whether the user would accidentally hit the screen with their head or hands. These design reviews lasted one to two hours and were held once a week for 3 weeks, until we were satisfied that we had converged on the final design. See Figures 4 and 5.

6. Evaluating the Physical PARIS Prototype

The simulation of the PARIS in the CAVE was very valuable, and the final experience of sitting at the first physical PARIS prototype was quite similar to sitting at the simulated PARIS in the CAVE. The physical prototype used an Electrohome projector (as used in the ImmersaDesk) for its visuals, and a PC bird with the emitter mounted under the desk (as in the ImmersaDesk 3 prototype) for the tracking. See Figures 6 and 7.

Sitting at the physical PARIS prototype gave a view that was very similar to the view in the simulated PARIS. The field of view in the physical prototype feels the same as in the simulation. The natural horizon on the PARIS seems to be much more appropriate than the natural horizon on the ImmersaDesk, as it should have been given this extra phase of prototyping. The reflection of the user's face in the mirror of the physical prototype is similar to that in the simulation. However the screen itself above the user's head is slightly more distracting in the physical prototype than in the simulation as our CAVE does not have a ceiling to truly show this surface. Both the reflection and the bright overhead screen tended to push the user away from the mirror, while the need to interact tended to pull them towards the mirror in both the simulation and the physical prototype.

There were still issues that remained unresolved until users could actually interact with the physical device. With the actual physical PARIS prototype built, users could run their own programs and see how they behaved, rather than the generic program used in the simulation. This was valuable since it allowed users to see how the PARIS changed their interaction with a world with which they were intimately familiar.

Issues that appeared with the physical prototype included the following.

- Most obviously, we were simulating an augmented reality device using the CAVE, which suffered from occlusions. The actual feeling of seeing your hands within the virtual imagery was quite convincing on the actual PARIS.
- The side lights that are used to illuminate the user's hands, keyboard, and mouse are critical to generating the augmented reality visuals, but are hard to simulate in VR. These lights need to be positioned so that the keyboard and mouse are visible but do not cast awkward shadows.
- Similarly, since the augmented reality affect is produced by the side lighting on the user's hands, those lights can be turned off, allowing the user to interact with the space without their hands being visible. We could not simulate that within the CAVE.
- While the half-silvered mirror quickly disappears from your vision when you sit at the display, as in the simulation, it is noticeable when you speak, since your voice echoes off the screen. Thus your ears tell you that there is something right near your face, while your eyes tell you that there is not.
- Some people found the edges of the physical PARIS screen to be dangerous when sitting down or standing up. While the edges of the screen were obvious in the CAVE simulation, the edges of the actual PARIS mirror were painted black so they would disappear.
- The mirror's physical presence is also more clearly felt when grabbing virtual objects and moving them around, as people would occasionally hit the underside of the mirror with their wanda.
- Because all of the pixels in the PARIS display are used on the screen, rather than on simulating the screen and the surrounding device as in the CAVE, the actual PARIS screen has higher resolution, better contrast, and is much brighter than in the simulation.
- We have not prototyped the movable mirror at this stage, but we have looked at the possibility of using the PARIS both as an environment to interact with virtual worlds, and as an environment to create them. Given the reasons listed above with regards to resolution, brightness, and contrast, this evaluation could not be made in the simulation. Using the physical prototype, the field of view seemed too large, and the text seemed slightly fuzzy for programming with multiple windows, compared to programming on a traditional monitor.

7. Conclusions and Future Work

We consider the prototyping on the PARIS in the CAVE to have been a success, and the CAVE seems to be valuable in prototyping the gross optics, and interaction volume of desktop-sized projection-based devices. It allows many people to experience the design before it is built to give their opinions, and saves time by trying out various options in software first.

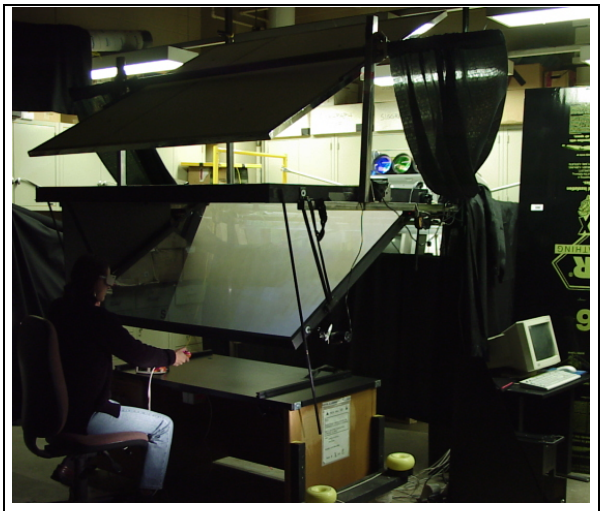

Figure 6: Photograph of the Physical PARIS Prototype

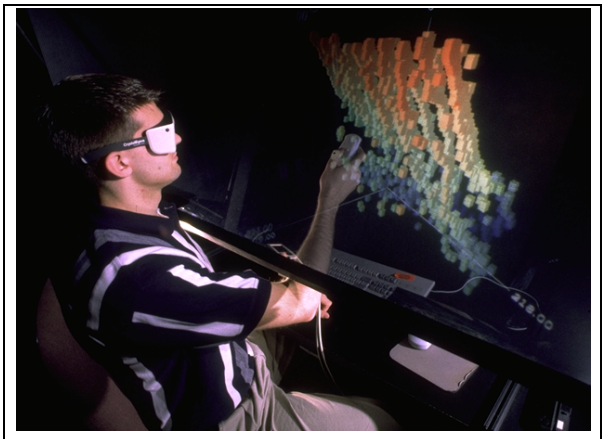

Figure 7: Photograph of a user working with the physical PARIS prototype

In designing the PARIS we brought all of the interested users together in the same CAVE to do the design reviews. There is no reason we would not have done this remotely, allowing remote collaborators in multiple CAVEs to join in on the discussion.

We have currently been using the PARIS with the traditional CAVE Wanda. Given the different nature of 'hands on' interactions with the PARIS, more interesting modes of interaction are possible. We are currently working with Tom Huang at Urbana to integrate gesture recognition into the PARIS, and are looking at integrating haptic devices.

Acknowledgements

The virtual reality research, collaborations, and outreach programs at the Electronic Visualization Laboratory (EVL) at the University of Illinois at Chicago are made possible by major funding from the National Science Foundation (NSF), awards EIA-9802090, EIA-9871058, ANI-9980480, ANI-9730202, and ACI-9418068, as well as NSF Partnerships for Advanced Computational Infrastructure (PACI) cooperative agreement ACI-9619019 to the National Computational Science Alliance. EVL also receives major funding from the US Department of Energy (DOE), awards 99ER25388 and 99ER25405, as well as support from the DOE's Accelerated Strategic Computing Initiative (ASCI) Data and Visualization Corridor program. In addition, EVL receives funding from Pacific Interface on behalf of NTT Optical Network Systems Laboratory in Japan.

References

[1] Cruz-Neira, C., Sandin, D., DeFanti, T., Kenyon, R., and Hart, J.C., The CAVE: Audio Visual Experience Automatic Virtual Environment, *Communications of the ACM*, Vol. 35, No. 6, June 1992, pp. 65-72.

[2] Czernuszenko, M., Pape, D., Sandin, D., DeFanti, T., Dawe, G., Brown, M., The ImmersaDesk and Infinity Wall Projection-Based Virtual Reality Displays. *Computer Graphics*, May 1997.

[3] Knowlton, K., Computer Displays Optically Superimposed on Input Devices. BSTJ (Bell System Technical Journal) 56 No. 3 (March 1977) pp.367-383.

[4] Pape, D., Anstey, J., Bogucki, M., Dawe, G., DeFanti, T., Johnson, A., Sandin, D., The ImmersaDesk3 - Experiences With A Flat Panel Display for Virtual Reality. In the proceedings of the Third International Immersive Projection Technology Workshop, Stuttgart, Germany, May 10-11, 1999, pp. 107-112.

[5] Poston, T., Serra, L., Dextrous Virtual Work, *Communications of the ACM* Vol. 39, No. 5, 1996, pp. 37-45.

[6] Smith, R., Peruski, L., Celusnak, T., McMillan, D., Really Getting into your Work: the Use of Immersive Simulations, In the proceedings of the first symposium on virtual reality in manufacturing, research, and education, Chicago, IL, Oct. 7-8, 1996, pp. 1-10.

[7] Wiegand, T., Schloerb, D., Sachtler, W., Virtual Workbench Near-Field Virtual Environment System with Applicatrions. *Presence* Vol. 8. No. 5, 1999, pp. 492-519.